Multi-function latching system
Series 7503 NITRO

- Modern plastic latch for high demands
- Modular system with different socket variants for various door stops
- Quick and easy to assemble
- Integrated tolerance compensation of the door thickness
- Can be used for left- and right-hand doors
- Lockable and ready for master key systems, Kaba versions available
- Different locking variants
- Standard door thickness 80-200mm
- Temperatures: -40°C - +80°C

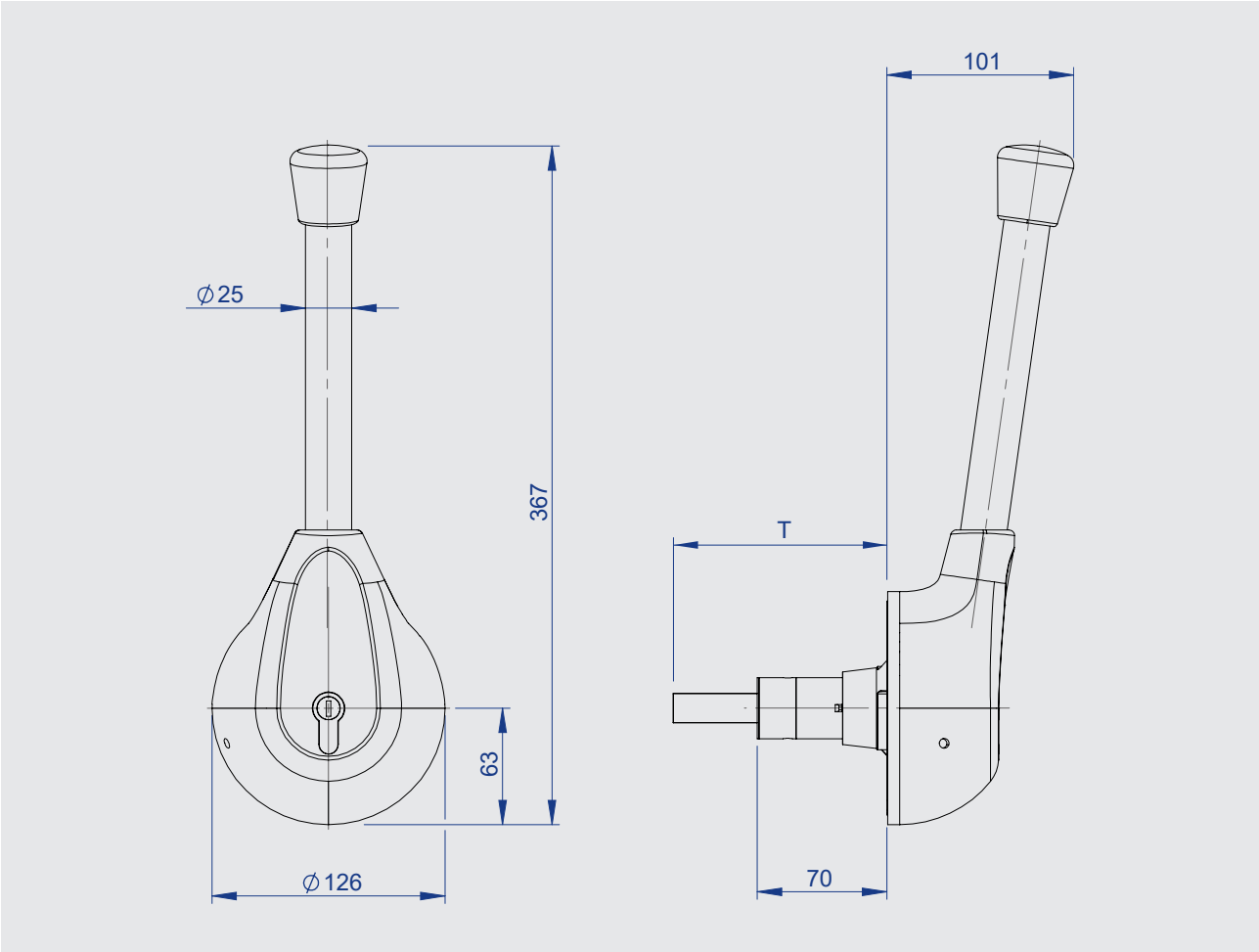

This latch is very versatile for cooling units. Our multi-purpose latching system comes with a wide range of socket variants for different cold room door stops. The enormous versatility is made possible by a flexible modular system in which the handles are not only lockable, but also ready for master key systems. In addition, a Kaba version can also be requested. This system can be used for both left- and right-hand doors by simply rotating the flanges and inner socket to the appropriate position. The modern plastic latching system not only masters the highest demands, but is also quick and easy to install. The integrated tolerance compensation keeps both handles close together. The multi-functional latching system is suitable for door thicknesses from 80 mm to 200 mm.
Even when the outside handle is locked, the inside handle still opens the door without overriding the locked state.

Part numbers for outside handles see p. 7
Part numbers for inside handles see p. 10

Materials

Handle housings:	Plastic
Handle pipe:	Stainless steel
Mechanics:	Die-cast zinc, cathodic dip coated (CDC) or stainless steel
Other components:	Plastic or die-cast zinc
Cap	
Inside handle:	Self luminescent
Colors:	black custom colors (RAL) on request (Inside handle: green)

Note: Please also see the assembly and mounting instructions.

T = Door thickness